Cocùn

SOFAS

2025

Antonio Citterio

Description

A welcoming haven, a soft embrace, a seating system designed to envelop and accommodate. With Cocùn, Antonio Citterio explores an idea of fluid, unconstrained comfort, giving life to a modular sofa that becomes a true archipelago of possibilities. Cocùn is a seating system articulated through five different geometric forms: a rectangular module, two curved dormeuse modules, a chaise longue, and a corner unit. These elements can be freely combined to create a multitude of compositions, harmoniously adapting to any setting, from expansive living areas to more intimate spaces. With its enveloping, refined design, Cocùn's lines express a contemporary elegance. The padded base evokes a sense of lightness, while the backrest, discreetly attached to the base using steel brackets upholstered in fabric or thick leather, offers ergonomic support without disrupting the fluidity of the forms. Cocùn is characterised by premium materials and sophisticated detailing. The aluminium base profile enhancing its aesthetic refinement. The soft, generous cushions ensure enveloping comfort, turning every seat into a uniquely sensory experience. The system invites both social interaction and relaxation.

Technical information

Technical drawings

CO220

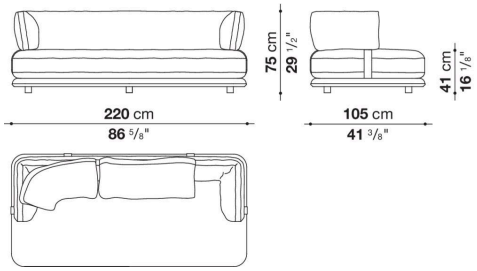

CO254

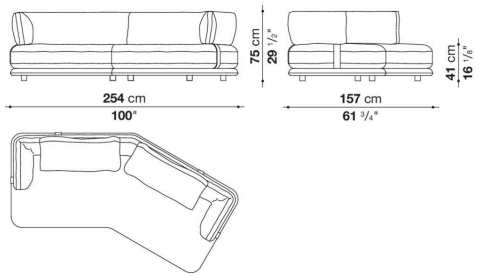

CO254S

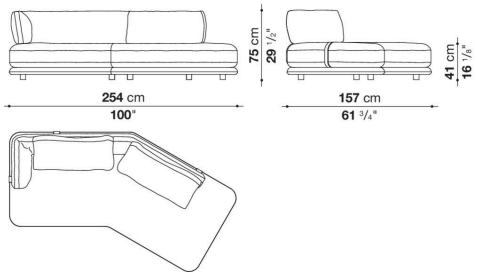

CO254D

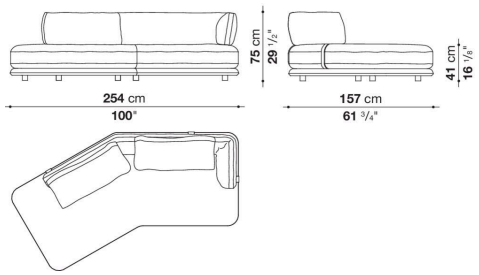

CO220TS_1

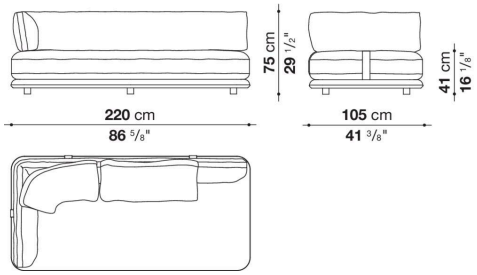

CO220TD_1

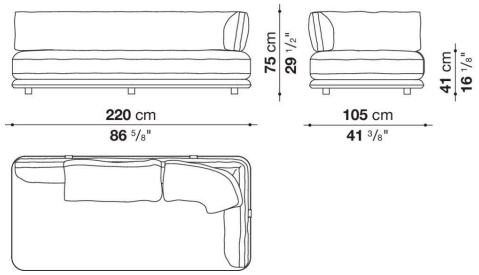

CO254TS

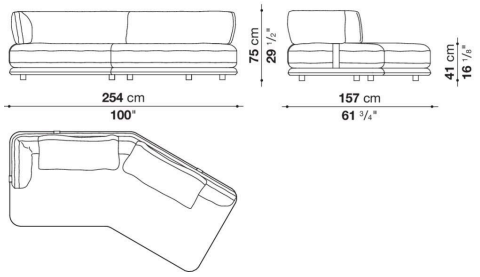

CO254TD

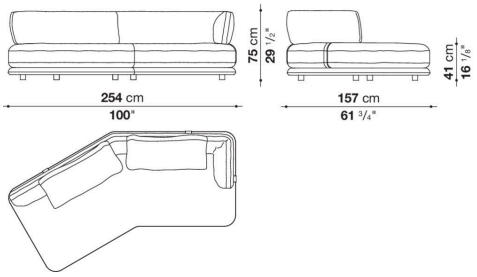

CO220TS_2

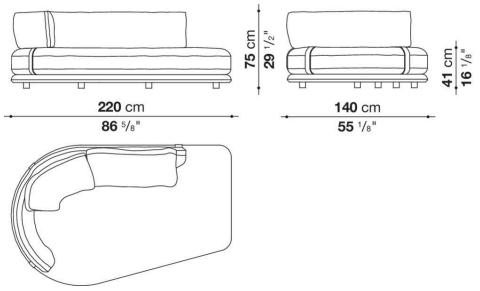

CO220TD_2

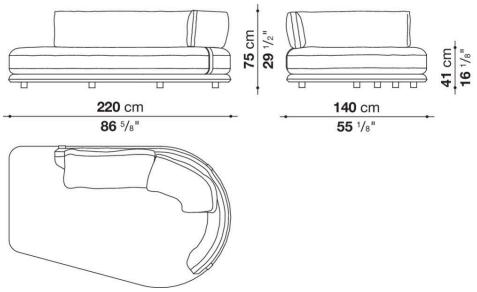

CO164TS

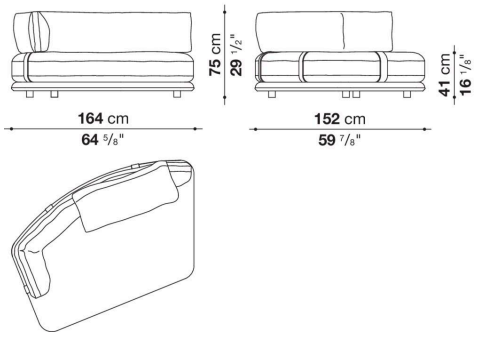

CO164TD

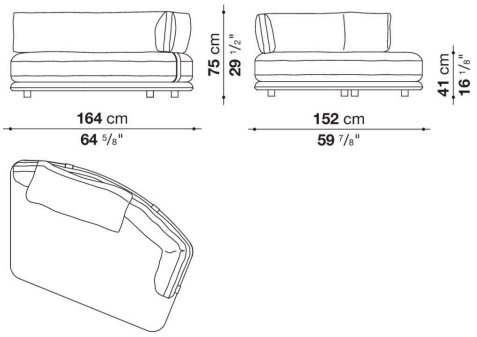

CO254TPS

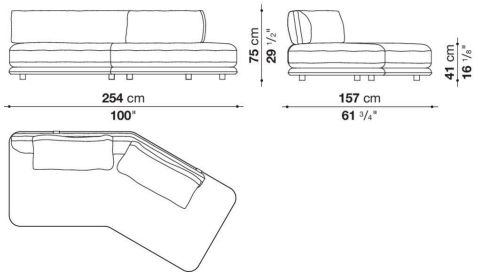

CO164TPD

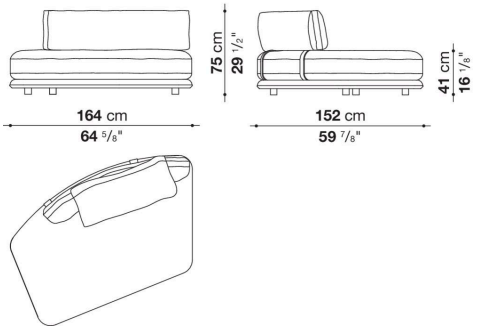

CO164TPS

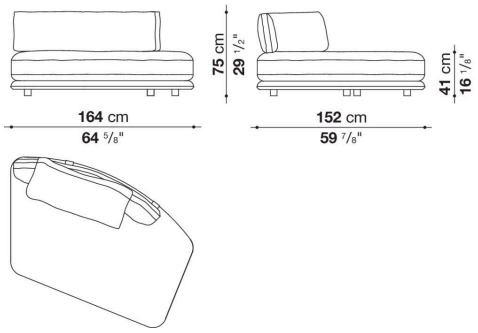

CO254TPD

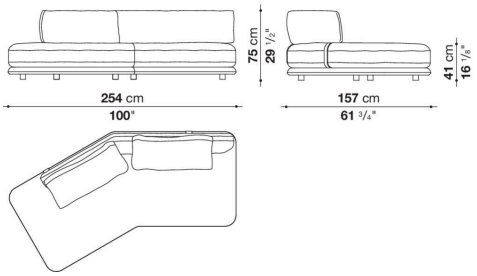

CO220LS_1

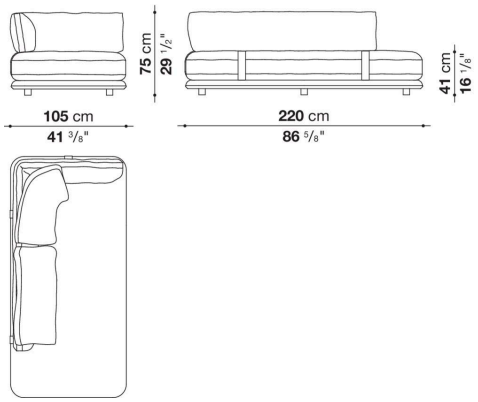

CO220LD_1

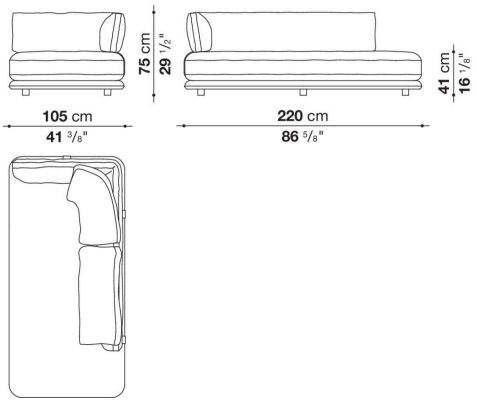

CO220LS_2

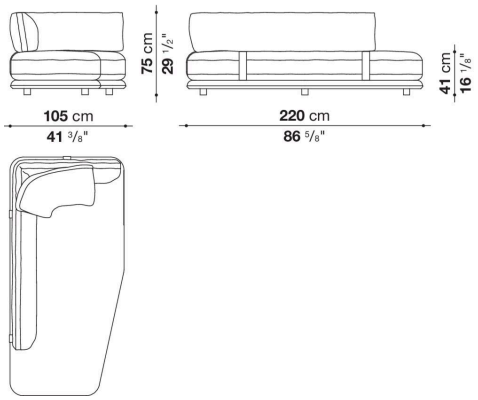
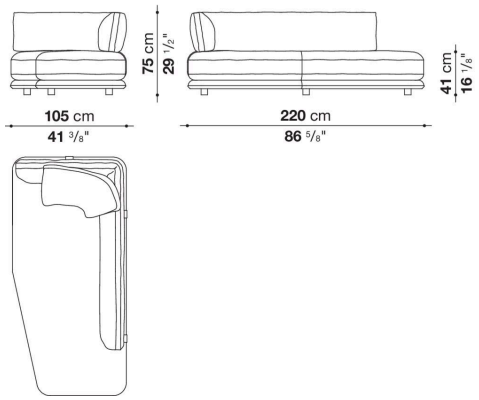
CO220LD_2