Charles Carré

SOFAS

2024

Antonio Citterio

Description

In the spirit of revamping the icons of our heritage collection, the Charles family is now adorned with a carré pattern that is carefully and wisely crafted with a very refined technique. The particular checkered workmanship of the seat cushion cover is particularly elaborate: the cutting of the upper surface of the carré cushions is carried out for each single square which is numbered during the cutting phase for identification and reassembled during the sewing phase where it is coupled with a textile ribbon (in the case of fabric) or with a leather profile (in the case of leather upholstery) first on the short sides (checkered/ribbon/checkered) and then on the long sides.

Technical information

Internal frame
tubular steel and steel profiles
Internal frame upholstery
Bayfit® flexible cold shaped polyurethane foam, polyester fibre cover
Internal frame upholstery (CHP_Q-CH150P_Q)
shaped polyurethane of different density, polyester fibre cover
Seat cushion upholstery (home)
shaped polyurethane of different density, sterilized down, polyester fibre cover
Seat cushion upholstery (public spaces)
shaped polyurethane of different density, polyester fibre, polyester fibre cover
Back cushion (CH48_C-CH72_C)
polyester fibre, cotton cover, box style typology
Feet
die-cast aluminium
Ferrules
thermoplastic material
Cover
fabric or leather (grosgrain ribbon)

Technical drawings

CH228_Q

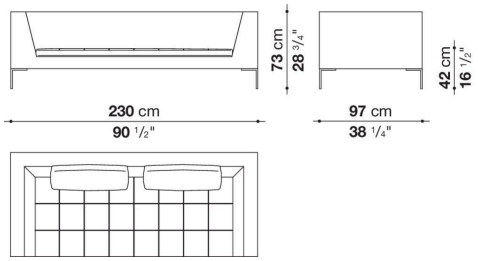

CH156C_Q

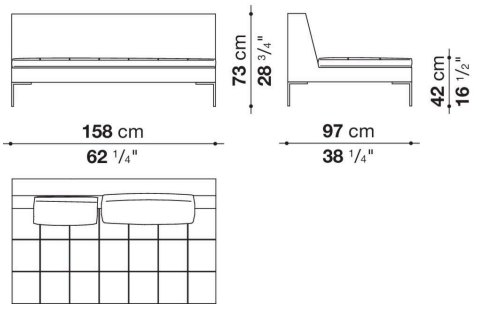

CH228C_Q

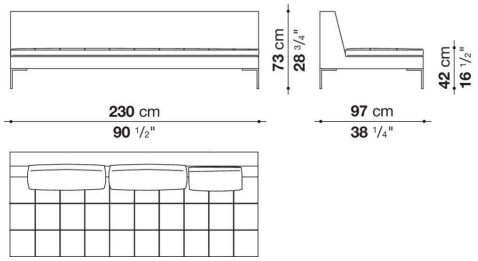

CH156S_Q **CH156D_Q**

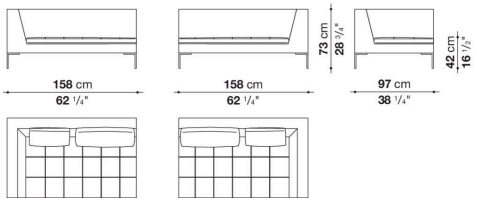

CH156D_Q

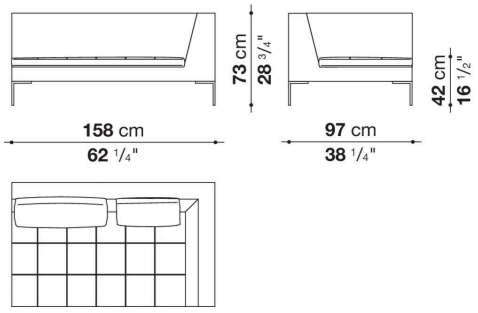

CH228S_Q

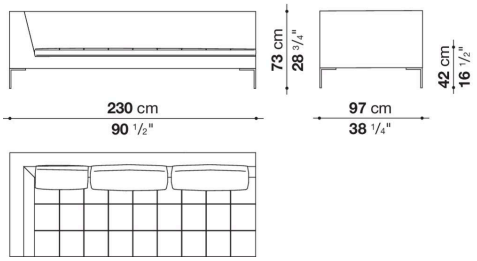

CH228D_Q

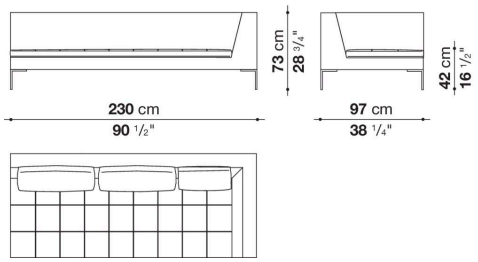

CH156TPS_Q

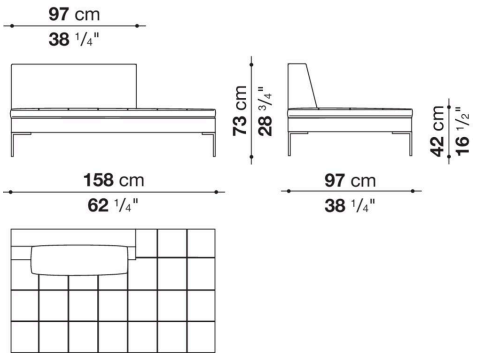

CH156TPD_Q

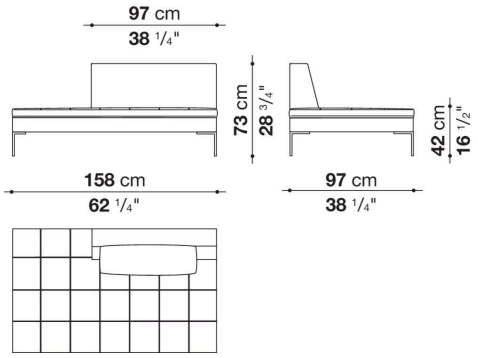

CH156LS_Q

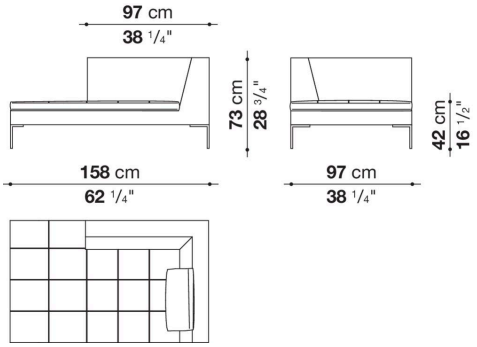

CH156LD_Q

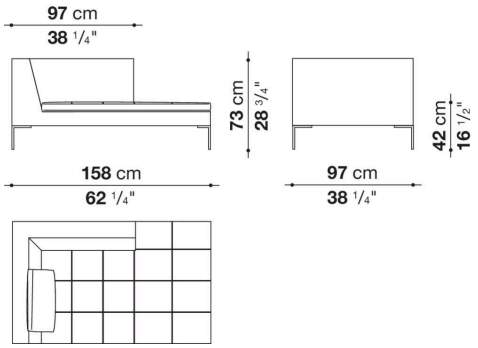

CH228LS_Q

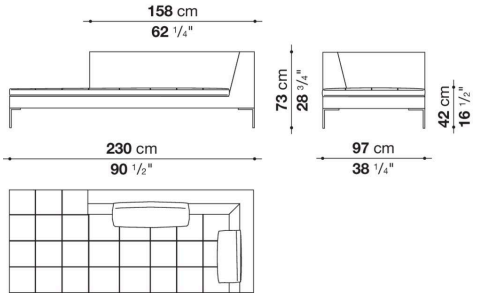

CH228LD_Q

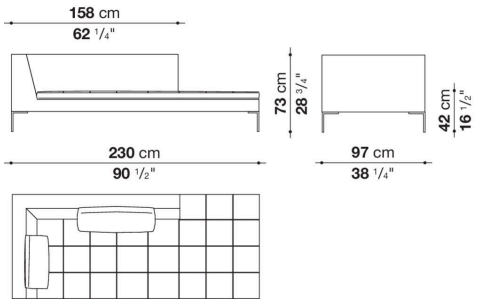

CH180L_Q

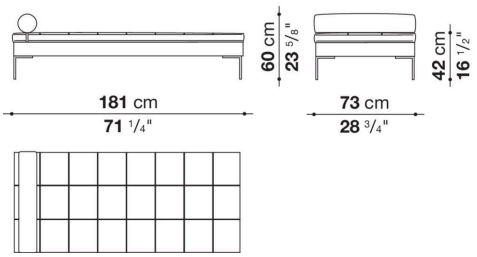

CH150P_Q

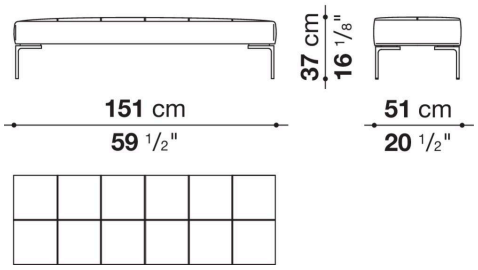
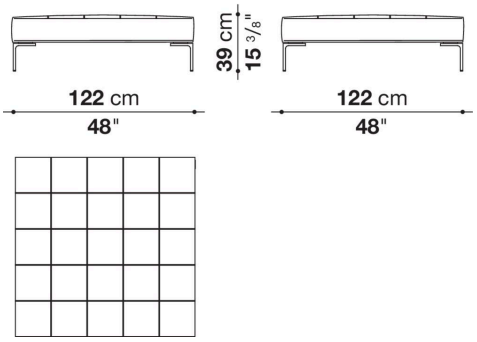
CHP_Q