Dambo

SOFAS

2023

Piero Lissoni

Description

Dambo is the third sofa system that Piero Lissoni has designed for B&B Italia. It's a modular system composed of irregular pentagons and rectangular modules that combines more complex geometric shapes with linear elements and lends itself to multiple compositions and environments. The pentagonal base elements, with their large dimensions and great flexibility, can be used as peninsulas when combined with other elements or as free-standing monoliths. They are cozy volumes to be placed in the middle of a room, to craft corner solutions or to create customized compositions. The high, enveloping backrests are a hymn to the organic forms of the botanical world. The armrests resemble petals thanks to a front movement that allows them to be lowered and adjusted as desired. There are five basic elements, characterized by a cozy softness and plush ergonomics. The different geometries are in harmony with each other, informal yet functional and versatile. The entire series boasts a cold-foamed construction system with state-of-the-art upholstery. Backrests and armrests are attached to the base structure by means of a bayonet coupling system. The small feet, with their discrete and essential design, have an elegant oval section. What emerges is lightness but also versatility, in line with the contemporary lifestyle dictates increasingly merging living spaces and home office corners. Dambo thus lends itself to a wide audience, faithful to the B&B Italia tradition, but with an eye on the art of modern living.

Technical information

Internal frame
tubular steel and steel profiles
Internal frame upholstery
Bayfit® flexible cold shaped polyurethane foam, polyester fibre cover
Cushions
polyester fibre
Feet
die-cast aluminium
Ferrules
plastic material
Cover
fabric or leather

Technical drawings

DM218

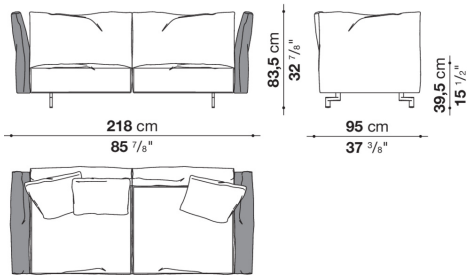

DM312

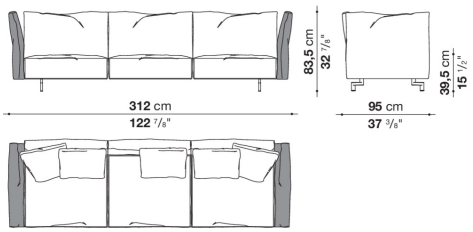

DM92C

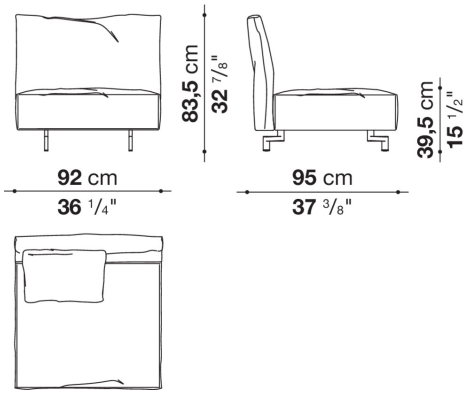

DM186C

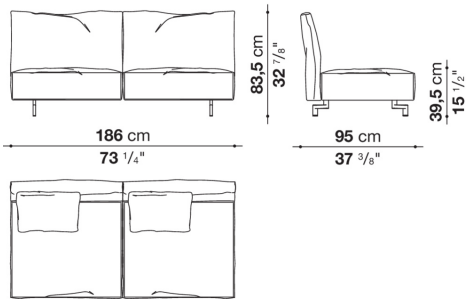

DM280C

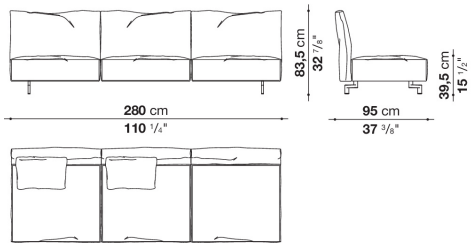

DM108S

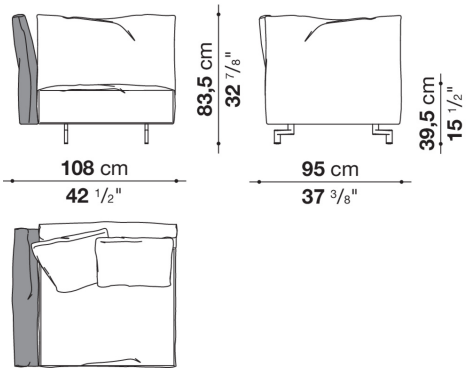

DM108D

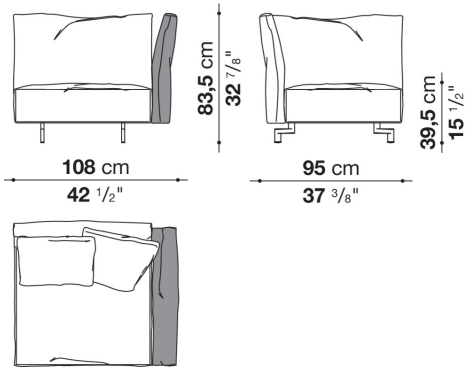

DM202S

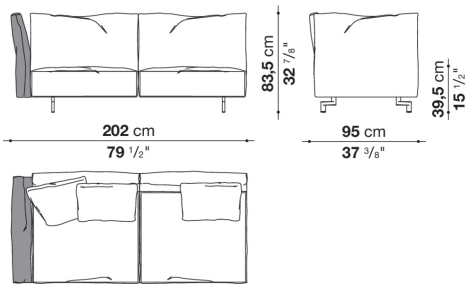

DM202D

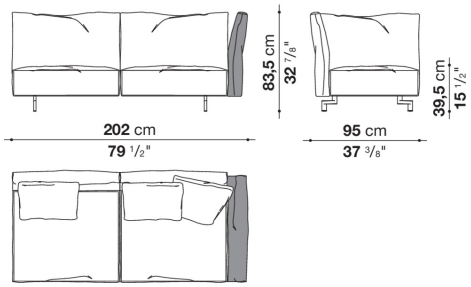

DM296S

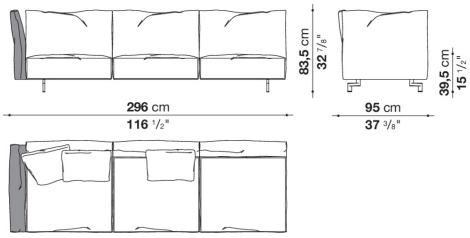

DM296D

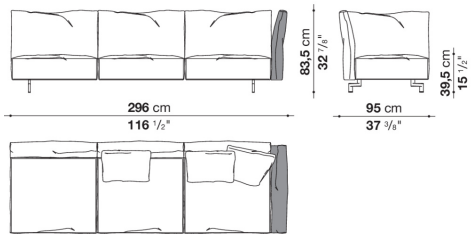

DM108AS

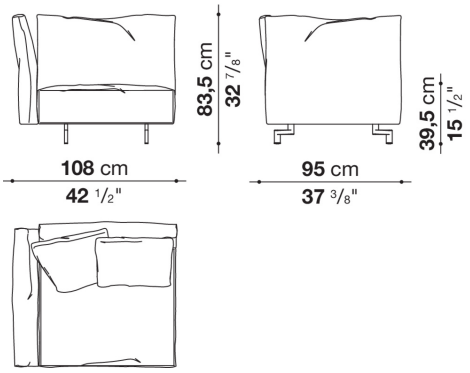

DM108AD

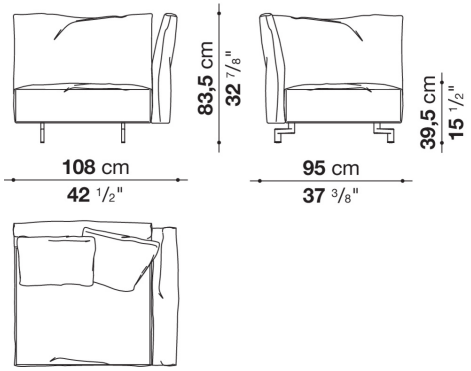

DM218AS

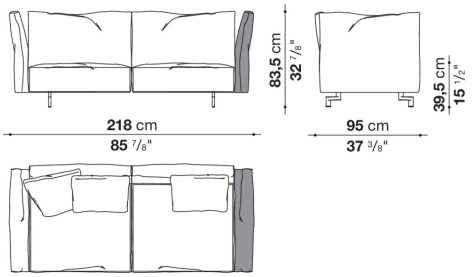

DM218AD

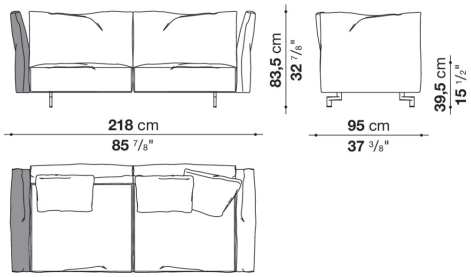

DM312AS

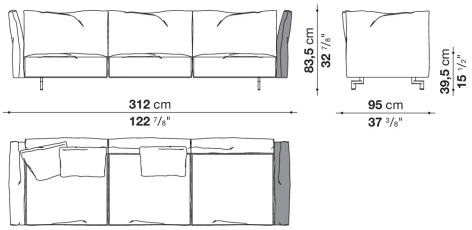

DM312AD

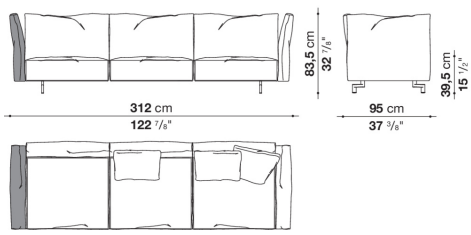

DM154LS_1

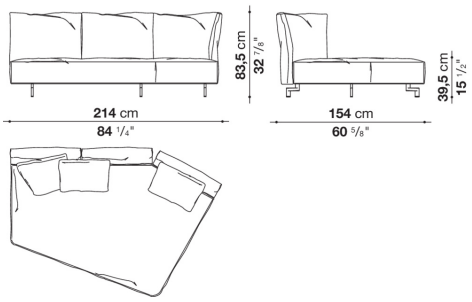

DM154LD_1

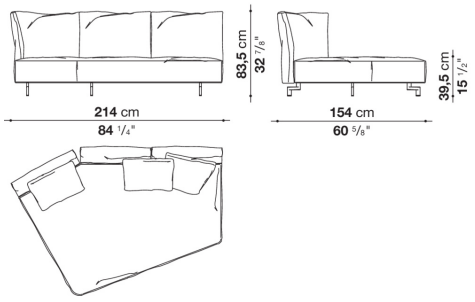

DM154LS_2

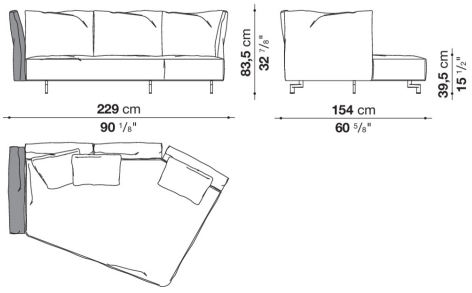

DM178LD_2

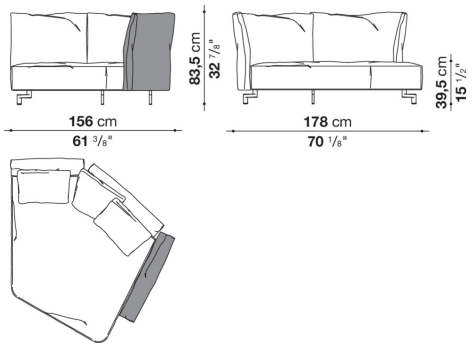

DM178LS_1

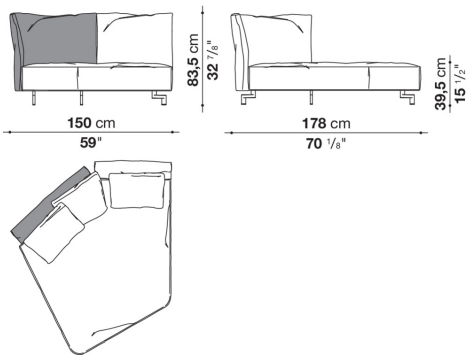

DM178LD_1

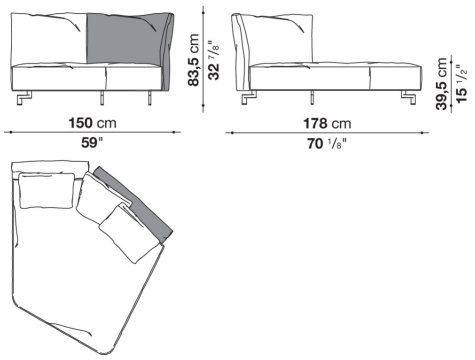

DM178LS_2

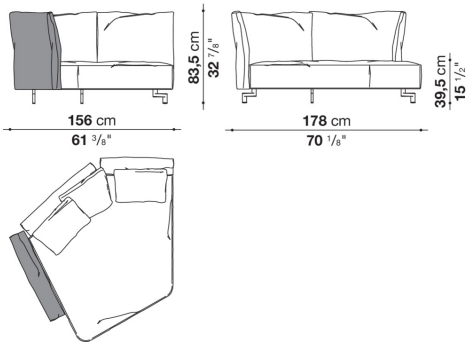

DM92P

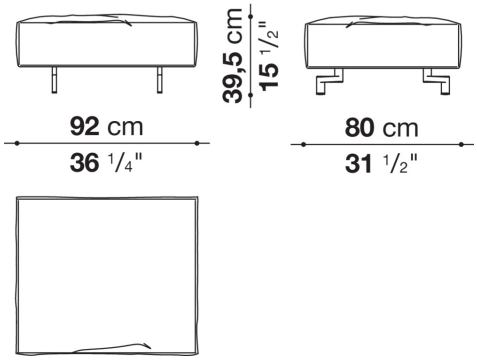

DM186P

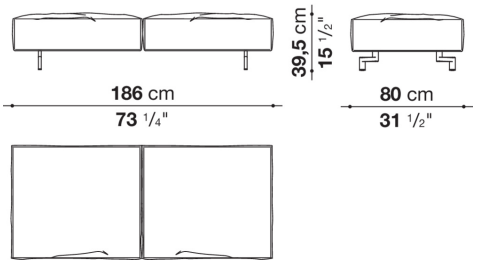
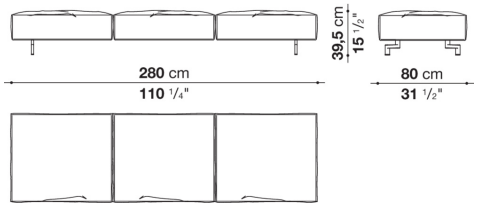
DM280P