Noonu

SOFAS

2021

Antonio Citterio

Description

Noonu is an atoll, a corner of pure relaxation amidst the colours of the Maldives. Noonu is also the name of the new sofa system that Antonio Citterio has designed for B&B Italia: a brand-new project created to continue and complete the journey started in 2018 with B&B Atoll. The Noonu collection works in harmony with B&B Italia's previous collections to form a fully-fledged archipelago of options, where the unique character that distinguishes each individual element does its part in telling a cohesive story. "The theme of islands started back in the mid-'80s," says architect Antonio Citterio, "when we invented a selection of new types with the Sity line. We started referring to sofas with 'peninsulas' and 'islands', but that sort of terminology was, at the time, somewhat unusual. Nowadays, they're part of our everyday vocabulary". Today, that pioneering intuition has been transformed into an organic vision in which Noonu is offering itself as a port, a starting point from which to cast off and explore new territory. Noonu is a system of upholstery in which large sizes meet impressive flexibility. The supporting structure disappears from view, creating "islands" which appear to almost float, suspended in mid-air. The seats themselves are deep, with a single, large seat cushion that guarantees extreme comfort, inviting and relaxing whilst also characterising the overall aesthetic. The tilted back is designed to accommodate cushions, which can be distributed however you wish. The design is made even more intriguing by a support element that can be arranged in any manner of positions: a roller cushion bound by sophisticated webbing to a die-cast aluminium frame, which sits beneath the seat cushion. This allows you to use it freely as a terminal armrest element or as a headrest, to read or to work, placed between the seats or removed entirely, depending on how the sofa is being used. As Antonio Citterio tells us, the story of Noonu is rooted in a journey that started a few years ago: "Atoll and Noonu stemmed from a single idea, namely a cylinder that could be used as an armrest and cushions distributed freely over the sofa. What's new in Noonu is the apparently suspended seating, which extends all the way to the floor, and the new types of elements that we have defined as "piano" and "sail" elements, lending a certain identity and richness to the design". Noonu is comprised of four basic elements, namely a square and a rectangle, in addition to the brand-new "piano" and "sail" elements. The piano-shaped base creates a welcoming curve in the backrest, whilst the sail provides a generous, rounded volume at the front. Antonio Citterio has designed them to be "natural chaises longues", bold evolutions of the peninsula module, new organic forms conceived with total relaxation in mind, just like the special pockets of nature that Noonu is named after. Each component in the Noonu collection has, at its base, a metal profile made from curved, pre-shaped aluminium, a strip that runs along the entire perimeter of the frame, defining it, which comes in a selection of different finishes. The same finishes are also available for the supports for the roller elements. Noonu is set to be introduced in a new fabric with 12 colour variants: solid colours and mélanges of neutral hues, but also sophisticated shades of blue, green, red and orange. These are bold yet extremely homely tones, designed especially to suit combinations between the various elements of each individual composition (frame, cushions, rollers), thus allowing for a custom solution of an unrivalled elegance. In addition to this fabric, Noonu will also be available in leather. According to Antonio Citterio, "Noonu is a fully-fledged domestic island". And this island will draw on the straight and curved lines of its four basic components to establish a dialogue with the walls, but also to take centre stage in the room and create spectacular and dynamic islands. The elements of Noonu can also stand on their own as individual objects, be combined to create personalised compositions, or be selected to form a dialectical relationship with other elements from B&B Italia's collections, such as B&B Atoll seats and ottomans, Mirto accessories, and Diesis and Pianura tables. "From Atoll to Noonu," concludes Antonio Citterio, "what we have is a path that has developed over several years and that now, finally, we can present as a single project, a fully-fledged archipelago".

Technical information

Internal frame
tubular steel and steel profiles
Internal frame upholstery
Bayfit® flexible cold shaped polyurethane foam, polyester fibre cover
Seat cushion
shaped polyurethane of different density, polyester fibre, cotton cover
Back cushion
polyester fibre, cotton cover
Armrest cushion
sterilized down, visco-elastic polyurethane
Roller
shaped polyurethane, polyester fibre cover
Roller support
die-cast aluminium
Roller webbing
fabric or leather
Lower edge
die-cast aluminium
Ferrules
plastic material
Cover
fabric or leather

Technical drawings

9N190

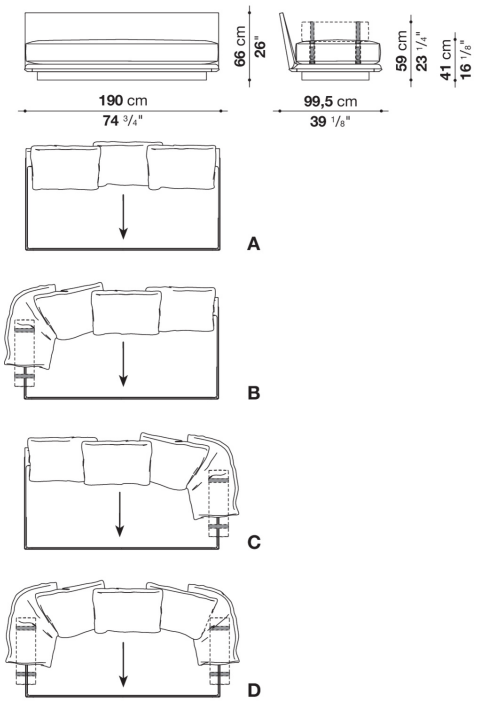

9N210

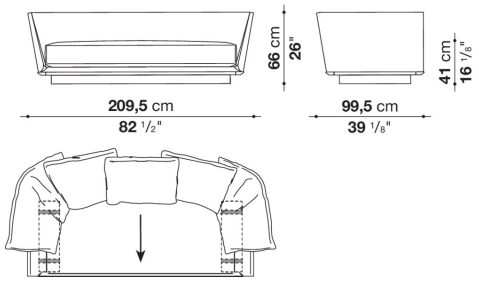

9N240

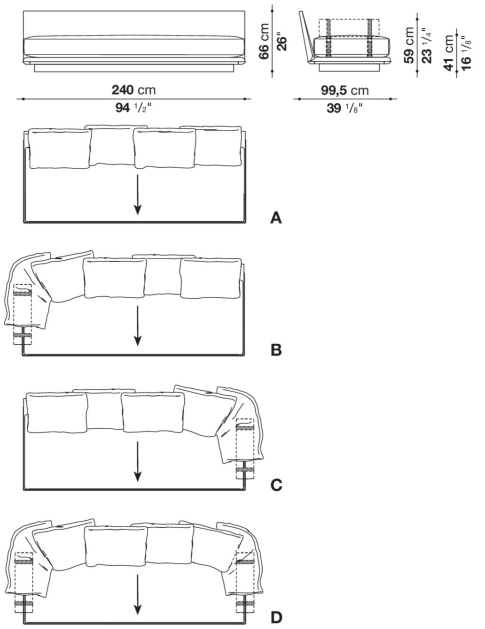

9N260

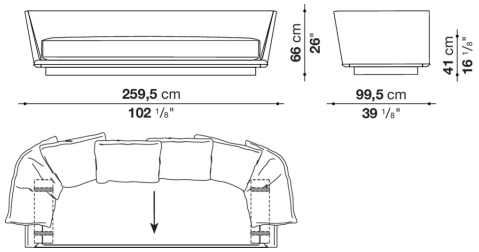

9N130C

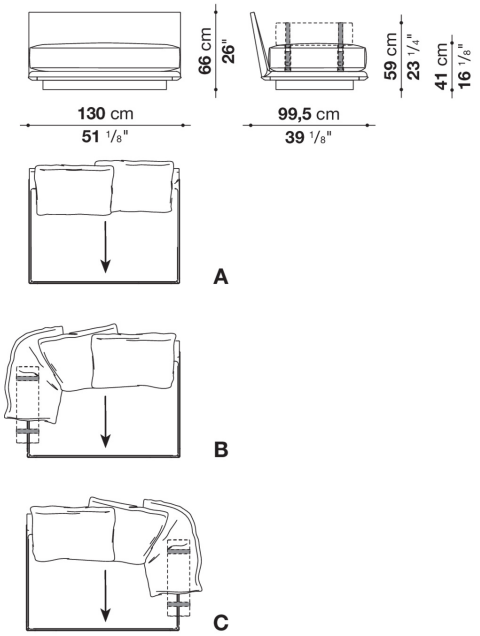

9N140S

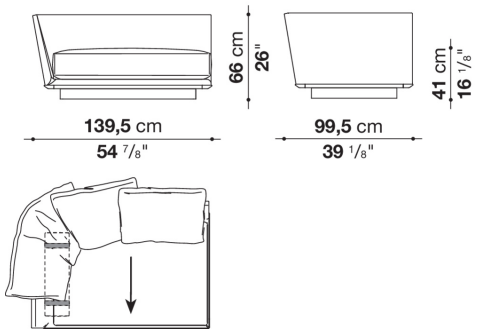

9N140D

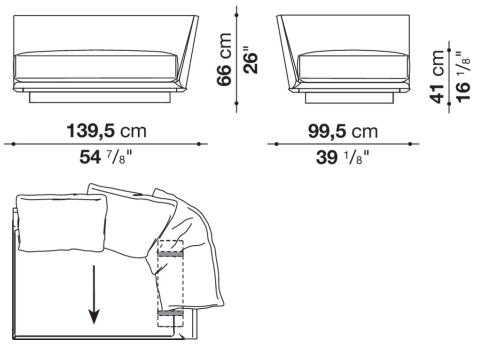

9N190S

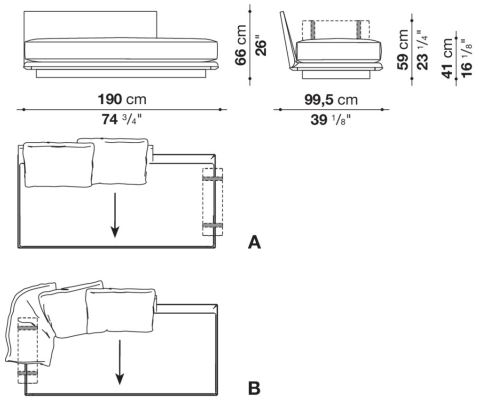

9N190D

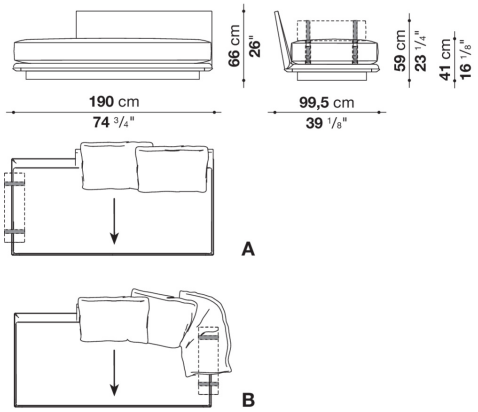

9N200S_1

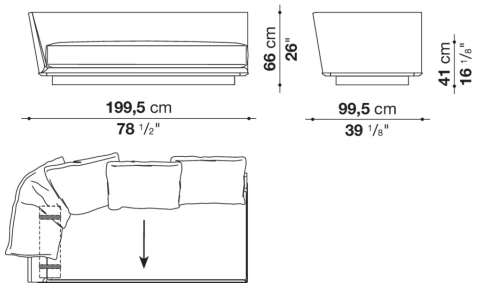

9N200D_1

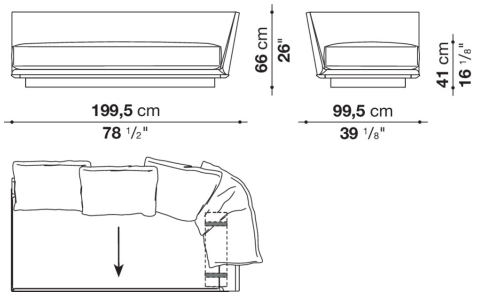

9N200S_2

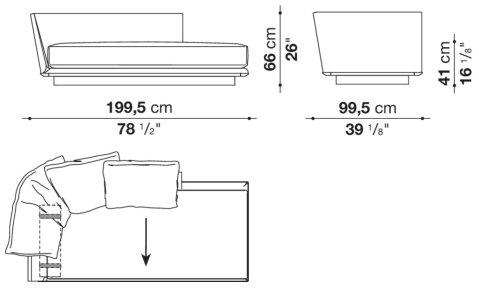

9N200D_2

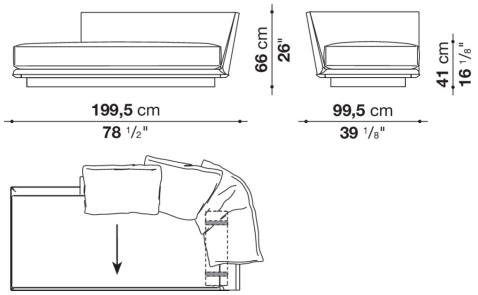

N190

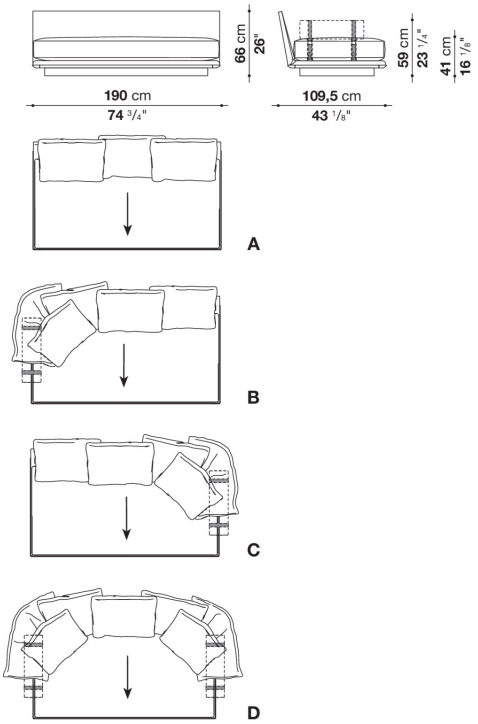

N210

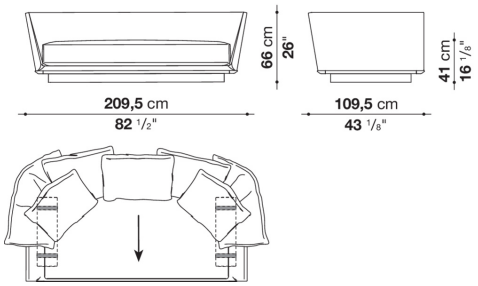

N130C

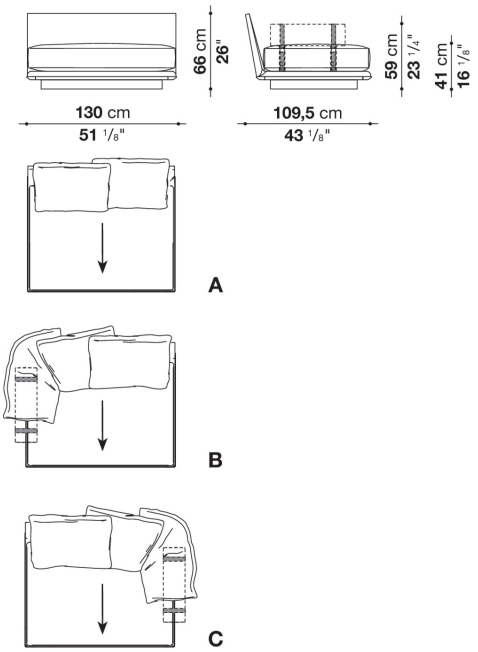

N140S

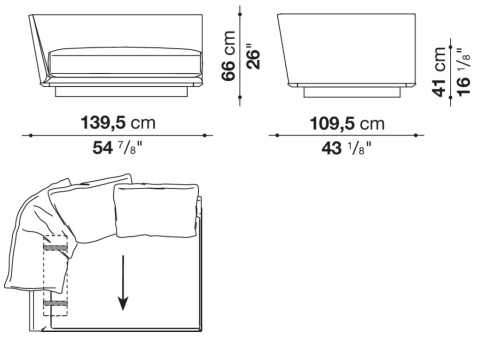
66 cm
26"
41 cm
16 1/8"
139,5 cm
54 7/8"
109,5 cm
43 1/8"

N140D

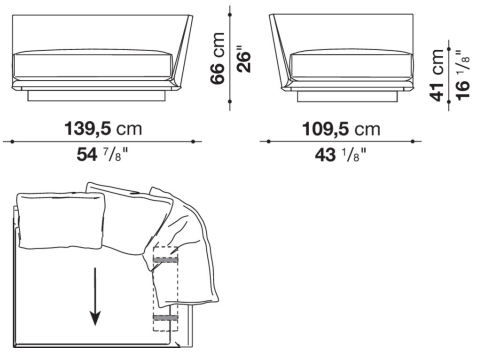
66 cm
26"
41 cm
16 1/8"
139,5 cm
54 7/8"
109,5 cm
43 1/8"

N190S

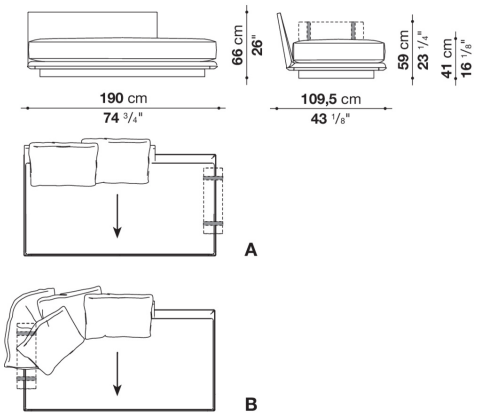

N190D

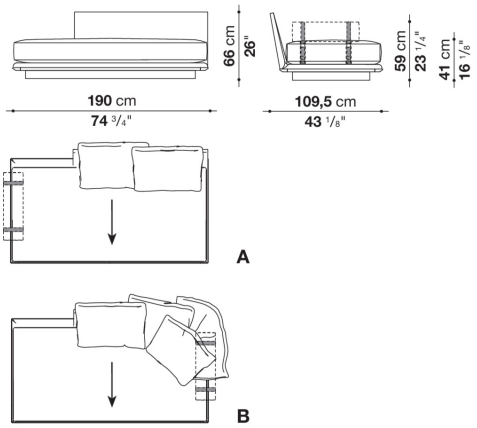

N200S_1

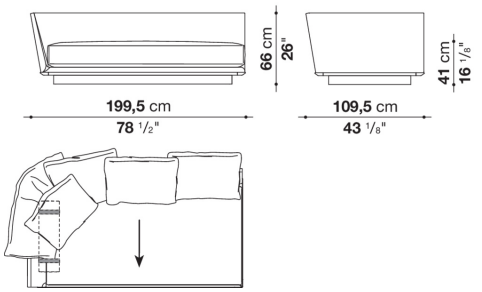

N200D_1

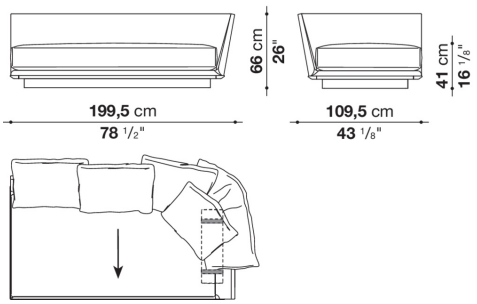

N200S_2

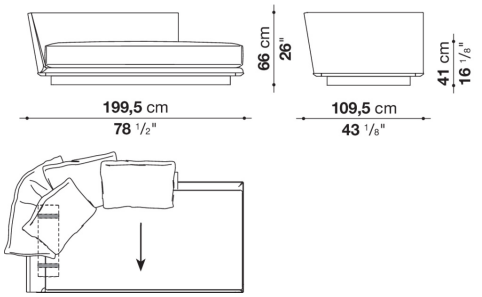

N200D_2

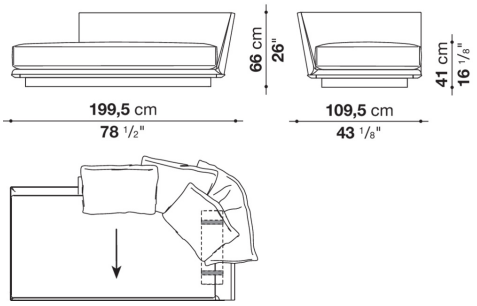

N200LS

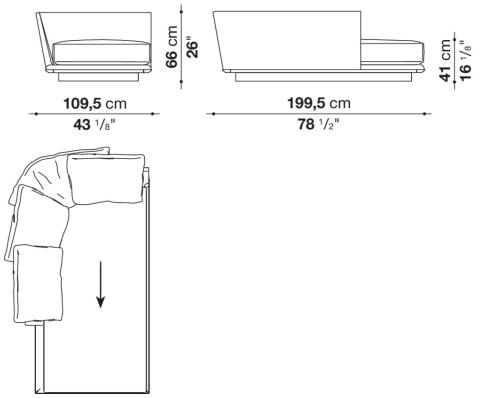

N200LD

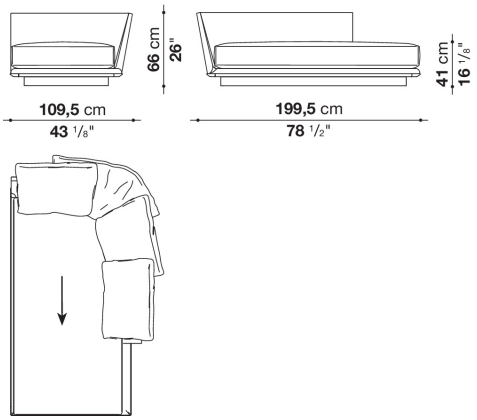

N240LS_2

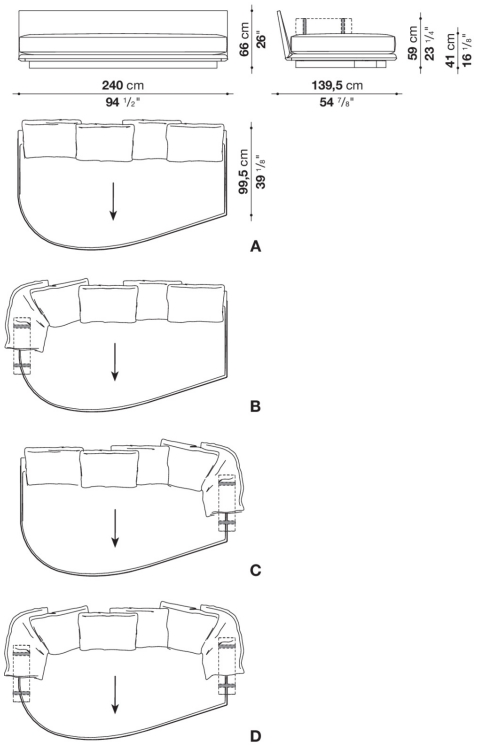

N240LD_2

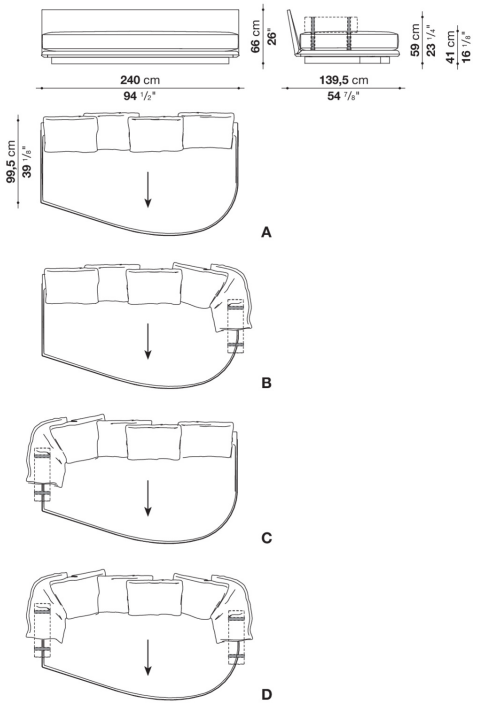

N130L

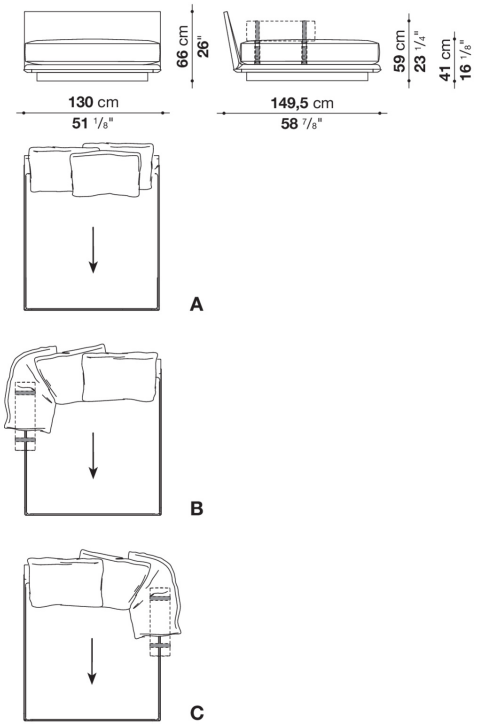

N140LS

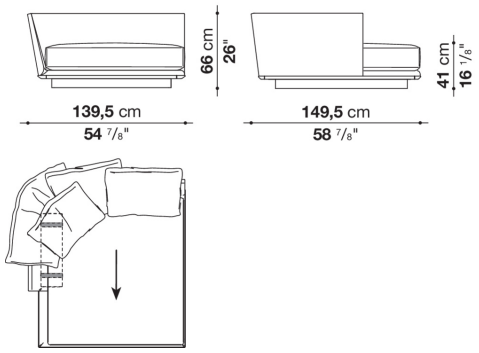

N140LD

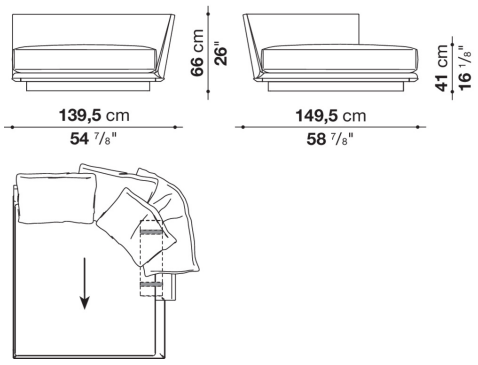

N240LS_1

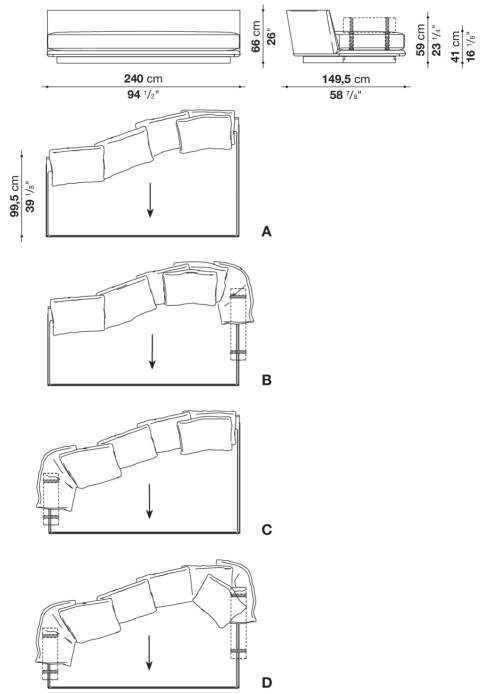

N240LD_1

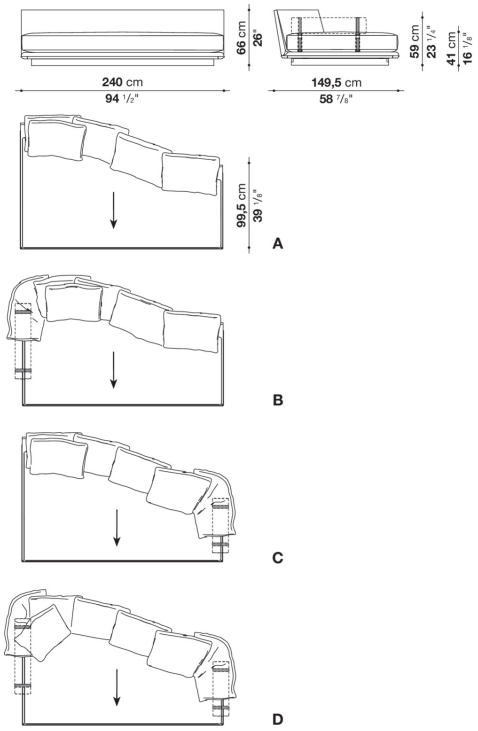

N250AS

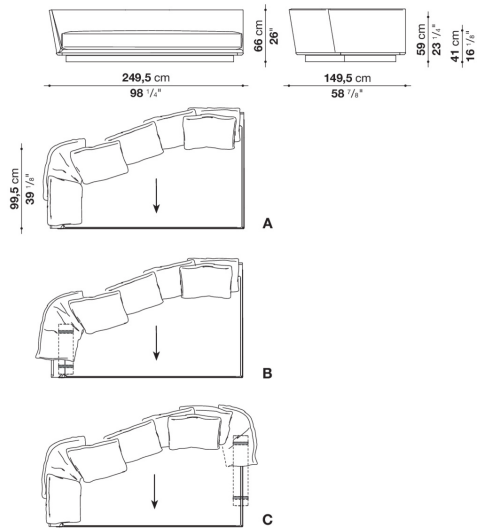

N250AD

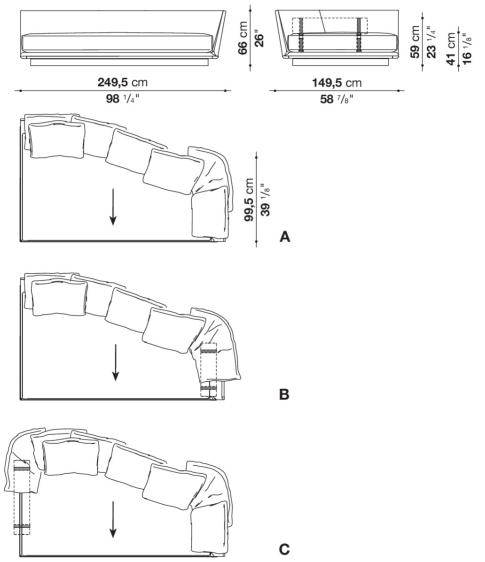

9N130P

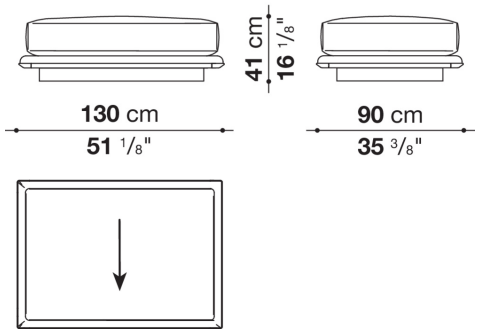

9N190P

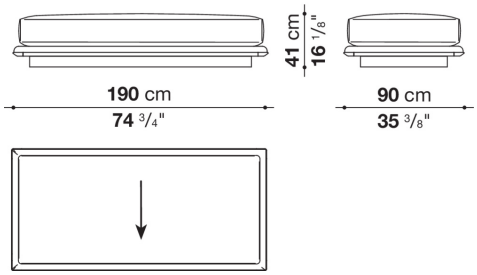

N130P_1

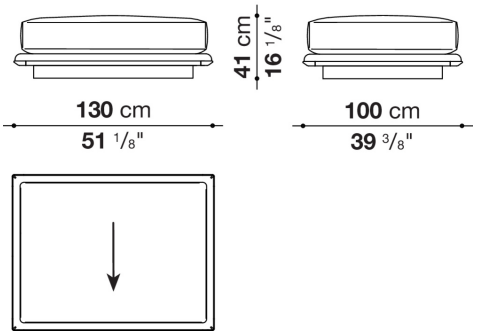

N190P

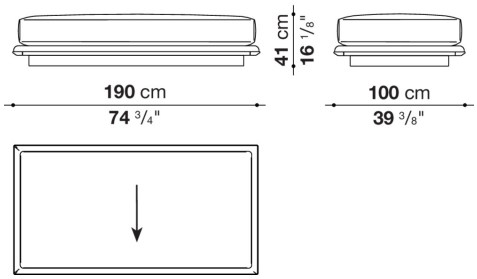
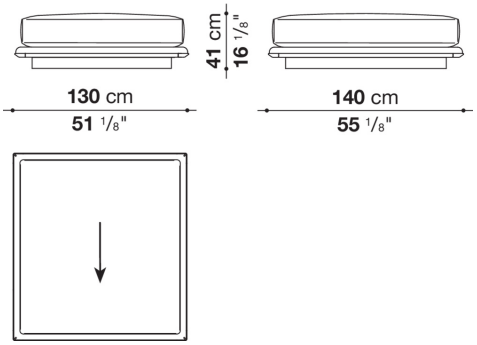
N130P_2